Study of the Anomalous Internal Pair Creation in ^{8}Be @ LNL-INFN

B. Góngora-Servín[1,2,*], *D.* Tagnani[3,**], *R.* Bolzonella[4], *A.* Celentano[5,6], *G.* Collazuol[7,8], *A.* Goasduff[1], *I.* Lombardo[9], *A.* Mengarelli[10], *J. J.* Valiente-Dobón[1,11], *M.* Vigilante[12], *P.* Aguilera[13], *F.* Angelini[1], *F* Azaiez[1], *L.* Baldesi[14], *M.* Balogh[1], *S.* Barlini[14], *J.* Benito-Garcia[1], *S.* Bottoni[15], *D.* Brugnara[1], *A.* Camaiani[14], *S.* Carollo[7,8], *G.* Casini[14], *G.* Corbari[15], *D.* Dell'Aquila[12,16], *F.* Ercolano[14], *A.* Ertroprak[17], *D.* Fabris[8], *F.* Galtarossa[7,8], *A.* Gottardo[1], *A.* Gozzelino[1], *F.* Gramegna[1], *D.* Lazzaretto[7], *D.* Mengoni[7,8], *A.* Nannini[14], *L.* Palombini[7], *J.* Pellumaj[7,8], *R. M.* Perez-Vidal[11], *S.* Piantelli[14], *S.* Pigliapoco[7,8], *E.* Pilotto[7,8], *M.* Polettini[7,8], *M.* Sigmund[18], *G.* Spina[15], *D.* Stramaccioni[7,8], *F.* Recchia[7,8], *L.* Redigolo[9], *K.* Rezynkina[7,8], *L.* Rigon[1], *M.* Rocchini[14], *M.* Rossi[7], *M.* Sedlak[19], *F.* Simpsi[7], *S.* Valdré[14], *L.* Zago[7,8], *I.* Zanon[20], *L.* Zappacosta[7], *T.* Marchi[1,***]

[1]Istituto Nazionale di Fisica Nucleare, Laboratori Nazionali di Legnaro, Legnaro, Italy.
[2]Università degli Studi di Ferrara, Ferrara, Italy
[3]INFN Sezione di Roma Tre, Roma, Italy
[4]EP Department, CERN, 1211, Geneva, Switzerland
[5]INFN Sezione di Genova, Genova, Italy
[6]Università degli Studi di Genova, Genova, Italy.
[7]Università degli Studi di Padova, Padova, Italy
[8]INFN Sezione di Padova, Padova, Italy
[9]INFN Sezione di Catania, Catania, Italy
[10]INFN Sezione di Bologna, Bologna, Italy
[11]IFIC Valencia - Valencia, Spain
[12]Università di Napoli Federico II, Napoli, Italy
[13]Comisión Chilena de Energía Nuclear, Santiago, Chile
[14]INFN Sezione di Firenze, Firenze, Italy
[15]INFN Sezione di Milano, Milano, Italy
[16]INFN Sezione di Napoli, Napoli, Italy
[17]ANL Argonne, Lemont, IL USA
[18]RBI Zagreb, Zagreb, Croatia
[19]Institute of Physics SAS, Bratislava, Slovakia
[20]KTH Royal Institute of Technology, Stockholm, Sweden

Abstract. The announcement of an anomaly in the internal pair creation (IPC) in ^{8}Be at the ATOMKI laboratory (Hungary) triggered a worldwide effort to understand the phenomenon. Such an anomaly has been interpreted as the sign of a previously unknown neutral boson, named *X*17. At the Laboratori Nazionali di Legnaro (LNL-INFN), a $e^{+}e^{-}$ pair spectrometer has been installed to study this anomaly with detectors designed to work in a vacuum environment. This characteristic results in the excellent angular resolution of ~2.5°. Three data-taking runs have been carried out at the AN2000 accelerator. LiF targets have been irradiated by a proton beam at energies near the resonances of 441 keV and 1.03 MeV of the ^{7}Li(p,$e^{+}e^{-}$)^{8}Be nuclear reaction. The pair spectrometer has proved capable of simultaneously measuring the energy of the pair and its relative angle. In this work, an overview of the experiments performed in 2023 and 2024 to study the IPC in ^{8}Be is presented.

1 Introduction

The study of electromagnetic transitions in nuclear physics is conducted experimentally by measuring the radiation emitted. Among the different de-excitation processes, the γ-ray emission is usually the main path. In some cases, the γ-ray emission is suppressed or even forbidden by the angular momentum conservation law. In such conditions, the electron conversion and internal pair creation (IPC) processes, usually suppressed, play a dominant role in the decay chain of excited nuclear states. In the IPC process, the distribution of the relative angle between the emitted pair is strongly correlated with the type and energy of the electromagnetic transition. Rose carried out a theoretical study in 1949 [1, 2], in which he described the angular-correlation distribution for $e^{+}e^{-}$ pairs in electric- and magnetic-transition processes. This model has proved to be consistent with experimental measurements as described in references [3, 4]. In contrast, in the isoscalar magnetic dipole transition ($1^{+}_{2} \rightarrow 0^{+}_{g.s.}$) of ^{8}Be, an anomaly

*e-mail: benito.gongora@lnl.infn.it
**e-mail: diego.tagnani@roma3.infn.it
***e-mail: tommaso.marchi@lnl.infn.it

© The Authors, published by EDP Sciences. This is an open access article distributed under the terms of the Creative Commons Attribution License 4.0 (https://creativecommons.org/licenses/by/4.0/).

has been reported by the ATOMKI collaboration [5]. A peak-like structure in the angular correlation distribution of the e^+e^- pairs has been interpreted as the creation and decay of a previously unknown boson, named $X17$, with a mass of 16.70 ± 0.35(stat.) ± 0.5(sys.). The same group has found a similar result for ^{4}He [6] and ^{12}C [7]. This discovery motivated the construction of a e^+e^- pair spectrometer to study this anomaly at the Laboratori Nazionali di Legnaro (LNL-INFN, Italy). This work presents a brief report on the first experiments conducted during the first data-taking campaign.

2 e^+e^- Pair Spectrometer

At the AN2000 Accelerator Hall of the LNL-INFN, a e^+e^- pair spectrometer was installed in 2023. The apparatus allows for measuring the angular-correlation distribution of e^+e^- pairs with an excellent angular resolution of ~2.5°. This result is mostly due to the fact that the detector is installed directly inside the vacuum reaction chamber. Hence, the measured angular distribution does not suffer from multiple scattering of emitted electrons and positrons within the walls of the chamber. The detector is based on a polyvinyl toluene scintillator and it is composed of clusters (clovers) of four $\Delta E - \Delta E - E$ telescopes, with 5 mm thickness for the ΔE layers and 5 cm for the E layer. The light emitted from the scintillator material is read out by SiPM detectors. The SiPMs in the ΔE layers are operated at 0° C, to match the optimal working temperature [9]. A detailed description of the setup can be found in reference [8]. The detector system used to determine the hit position of the leptons is described in [9]. In the first run, only two clover detectors (see Figure 1) were placed to study the capabilities of the setup to measure the e^+e^- pairs in coincidence. In this experiment, the detector setup demonstrated its ability to measure the e^+e^- energy pair and the relative angle between the e^+e^- pair. The current status of the spectrometer consists of four clover detectors that can be placed at any plane with respect to the beam direction (as long as the detectors do not interfere with the beam, around 40°-140°).

3 Simulation

The detector setup has been simulated using the Geant4 toolkit [10]. This information has been used to evaluate the performance of the detector setup across different configurations and to define the analysis methods. In addition, this tool allows us to estimate the contributions from the environmental background and from pairs created by the interaction of γ rays with matter (external pair creation, EPC).

The simulation showed that the pair spectrometer has a low detection efficiency near the borders of the clover, because electrons (or positrons) could pass through the detector without being stopped, as shown in Figure 2. In addition, bremsstrahlung X-ray produced by the deacceleration of e^+/e^- in this part of the detector could easily escape from it. In those events, the energy reconstruction

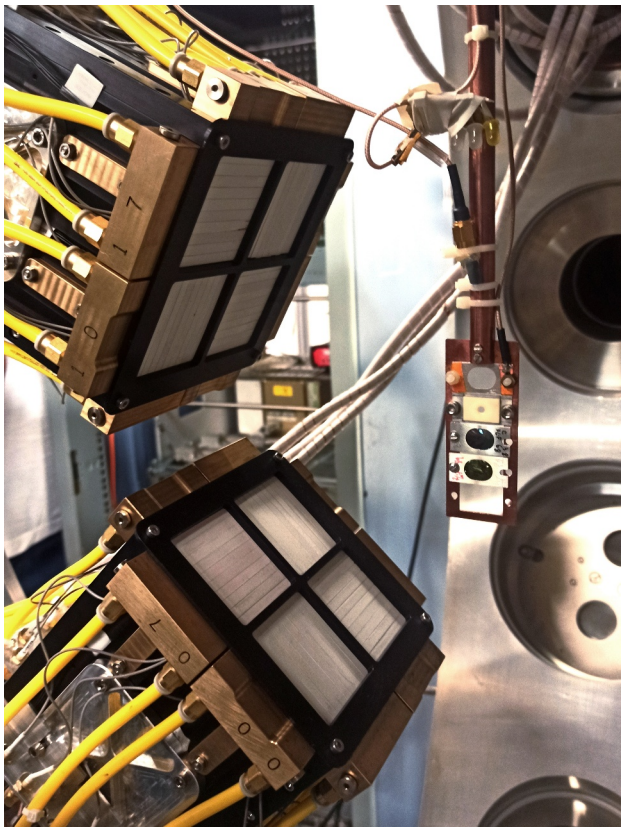

Figure 1: e^+e^- pair spectrometer installed at the AN2000 accelerator Hall (LNL-INFN). In the commissioning experiment (COM), two clover detectors were placed in the reaction chamber to study the behavior of the detectors under beam conditions.

of the pair is lower than their emission energy (see left tail in Figure 3b).

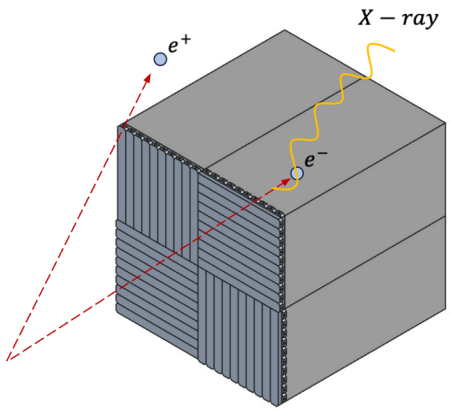

Figure 2: e^+ passing through a clover detector without getting stopped and an X ray (bremsstrahlung) escaping from the detector. Those events have a higher probability of occurrence as long as the leptons are closer to the border of the clover.

To reduce the effect of the phenomenon mentioned above, a fiducial region in the hit position measured in the clover has been placed, rejecting events 0.5 cm from the perimeter of the clover (see Figure 3a). According to Geant4 simulations, this gate increases the P/T (Peak to Total) ratio, in the energy reconstruction, from ∼33% to ∼39% (see Figure 3b). This condition allows us to make a better selection of a transition by using the energy of the pair. Reference [8] contains further information about the analysis method used for the simulation output, and includes a matrix showing the angular correlation of e^+e^- pairs emitted isotropically for an 18.13 MeV transition energy (similar to the isoscalar magnetic dipole transition in ^{8}Be) versus the energy deposited in the clover detectors.

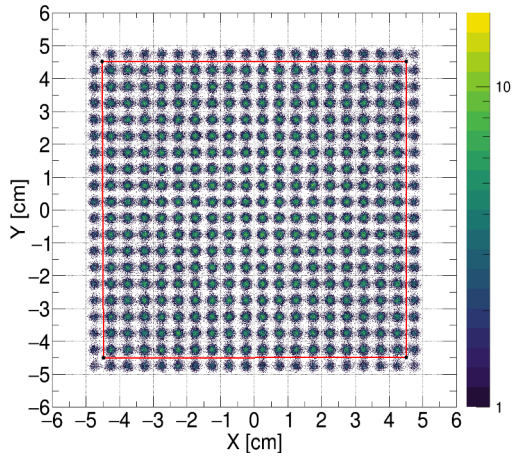

(a)

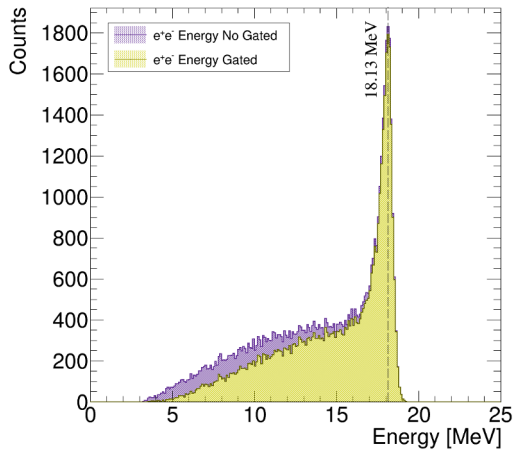

(b)

Figure 3: (a) Position matrix of the hits in the clover detector from e^+e^- pairs simulated with an isotropic emission in a 18.13 MeV transition energy. The red square shows a fiducial region set to reject the events near the borders of the clover. (b) Energy measured in the spectrometer by the e^+e^- pairs simulated in (a), where the yellow spectrum represents the events inside the red square in the position matrix and the purple one includes all of the hits.

Table 1: Summary of the data collected in the three data-taking periods to study the anomalous internal pair creation in ^{8}Be. The table includes a column with the effective beam on target time.

Experiment	Number of Clovers	Angles [°]	Time [hrs]
COM	2	30, 315	161
EXP 1	4	30, 165, 240, 315	117
EXP 2	4	30, 150, 240, 330	202

4 Experiments

During 2023 and 2024, three data-taking runs have been performed. The first, corresponding to the commissioning (COM), was dedicated to the characterization of the detector performances under beam conditions. Two clover detectors were placed at 30° and 315° (see Figure 1). The isovector ($1^+_1 \rightarrow 0^+_{g.s.}$) and isoscalar ($1^+_2 \rightarrow 0^+_{g.s.}$) magnetic dipole transitions in ^{8}Be were studied via the nuclear reaction ^{7}Li(p,e^+e^-)^{8}Be. LiF targets from 34 to 1000 μg/cm^2 were irradiated by a proton beam with energies from 430 to 1100 keV. Due to the presence of fluorine in the target, the pairs coming from the IPC process in the nuclear reaction ^{19}F(p,αe^+e^-)^{16}O were used as a reference. In this reaction in the energy range of 0.4-1 MeV, the 0^+_2 state is populated, and the IPC process has a large cross-section in the $0^+_2 \rightarrow 0^+_{g.s.}$ transition. In the next two experiments, two clover detectors were added to the setup. The Geant4 simulations showed that placing the detectors at 30°, 165°, 240°, and 315° results in a local maximum efficiency near the angular range where the Hungarian group reported the anomaly. This configuration was chosen to run the first complete experiment (EXP 1). In contrast, setting the detectors at 30°, 150°, 240°, 330°, a more uniform efficiency was found, with a rapid increasing from 150° to 180°, where the probability of the IPC emission is minimum for all the electromagnetic transitions. This configuration was used in the second experiment (EXP 2), since it allowed us to study the angles of the anomaly and also the surrounding region. Table 1 shows a summary of the data taking performed during the first campaign, including a column with the effective beam on target time.

During the experiments, the target was carefully monitored to determine its integrity. LiF targets are fluorescent; thus, a system of two video cameras was installed inside the chamber to watch the light emitted during the irradiation. The target temperature was also monitored using a thermal camera, which registered an average temperature of ∼50°C. The population of the states of interest was monitored by placing a $LaBr_3$ detector at ∼50 cm distance from the target. Since the thickness of the reaction chamber was about 5 mm, the γ rays of the de-excitations of the populated states were measured in this detector. Regarding the detectors, because the best performance for position detection is obtained at ∼ 0°C, as shown in [9], the temperature of the SiPMs was carefully monitored using a series of PT100 devices.

The DAQ system consisted of 4 CAEN digitizer model V1730 (16 channels, 14-bit 500 MS/s), since they offer an appropriate sampling speed for the SiPM coupled to the scintillator material used in manufacturing the detectors (EJ-200, rise time 0.9 ns, decay time 2.1 ns). The Digital Pulse Processing for Charge Integration and Pulse Shape Discrimination (DPP-PSD) CAEN firmware was used to process the signals in the acquisition. Therefore, the integral value of the signals in a 500 ns window was recorded, but no traces were acquired to limit the data bandwidth.

5 Conclusion and Future Work

The pair spectrometer installed at the LNL-INFN laboratory offers the opportunity to measure angular correlation distributions of e^-e^+ pairs with a high angular resolution of ~2.5°. Three data-taking sessions have been performed at the AN2000 accelerator, where LiF targets were irradiated with a proton beam energy up to 1.1 MeV and an intensity of around 800 nA. The data analysis is currently in progress. Preliminary results clearly show well-reconstructed IPC pairs in the two transitions of interest in ^{8}Be ($1^+_2 \rightarrow 0^+_{g.s.}$ and $1^+_1 \rightarrow 0^+_{g.s.}$). The next step is to simulate the $M1$ transitions using the Rose model for pairs emitted in transitions at 17.6 and 18.13 MeV, as well as a realistic background model. Thus, by comparing the experimental data with a simulation that includes the elements mentioned above, the presence of an excess near 140° can be evaluated, and this result will contribute to the discussion about the existence of the $X17$ boson.

References

[1] E. Rose, Internal Pair Formation, Phys. Rev. **18**, 678 (1949). https://doi.org/10.1103/PhysRev.76.678

[2] E. Rose, Erratum: Internal Pair Formation, Phys. Rev. **78**, 184 (1950). https://doi.org/10.1103/PhysRev.78.184

[3] S. Devons, and G. Goldring, Emission of Electron-Positron Pairs from Light Nuclei I: Monopole Transition in ^{16}O, Proceedings of the Physical Society. Section A **67**, 134 (1954). https://doi.org/10.1088/0370-1298/67/2/305

[4] S. Devons, and G. Goldring, Emission of Electron-Positron Pairs from Light Nuclei II: γ-Transitions in ^{8}Be, ^{10}B and ^{16}O, Proceedings of the Physical Society. Section A **67**, 413 (1954). https://doi.org/10.1088/0370-1298/67/5/302

[5] A. J. Krasznahorkay, M. Csatlós, L. Csige, Z. Gácsi, J. Gulyás, M. Hunyadi, I. Kuti, B. M. Nyakó, L. Stuhl, J. Timár, T. G. Tornyi, and Zs. Vajta, Observation of Anomalous Internal Pair Creation in ^{8}Be: A Possible Indication of a Light, Neutral Boson, **4**, 116 (2016). https://doi.org/10.1103/PhysRevLett.116.042501

[6] A. J. Krasznahorkay, M. Csatlós, L. Csige, J. Gulyás, A. Krasznahorkay, B. M. Nyakó, I. Rajta, J. Timár, I. Vajda, and N. J. Sas, New anomaly observed in ^{4}He supports the existence of the hypothetical X17 particle, Physical Review C **104**, (2021). https://doi.org/10.1103/PhysRevC.104.044003

[7] A. J. Krasznahorkay , A. Krasznahorkay, M. Begala, M. Csatlós, L. Csige, J. Gulyás, A. Krakó, J. Timár, I. Rajta, I. Vajda, and N. J. Sas, New anomaly observed in ^{1}2C supports the existence and the vector character of the hypothetical X17 boson, Physical Review C **106**, (2022). https://doi.org/10.1103/PhysRevC.106.L061601

[8] B. Gongora-Servin, T. Marchi, D. Tagnani, A. Celentano, A. Goasduff, and J.J. Valiente-Dobón, e^+e^- Pair Spectrometer for Studying the Internal Pair Creation in ^{8}Be at LNL-INFN. Acta Phys. Pol. B Proc. Suppl. **18**, 2-A13 (2025). https://doi.org/10.5506/APhysPolBSupp.18.2-A13

[9] F. Acerbi, D. Tanagni, T. Marchi, B. Gongora-Servin, A. Celentano, R. Bolzonella, A. Goasduff, J. J. Valiente-Dobon, F. Gramegna, G. Collazuol, and A. Gola, Reduced-Channels Position-Sensitive 10×1 SiPM Tile for Scintillator-Bars Readout. IEEE Transactions on Nuclear Science **71**, 12 (2024). https://doi.org/10.1109/TNS.2024.3489713

[10] S. Agostinelli et al., Geant4—a simulation toolkit. Nuclear Instruments and Methods in Physics Research Section A: Accelerators, Spectrometers, Detectors and Associated Equipment **506**, 250-303 (2003). https://doi.org/10.1016/S0168-9002(03)01368-8.